# Power Electronics-Enabled Self-X Multicell Batteries: A Design Toward Smart Batteries

Taesic Kim, *Student Member, IEEE*, Wei Qiao, *Member, IEEE*, and Liyan Qu, *Member, IEEE*

***Abstract*—The traditional multicell battery design usually employs a fixed configuration to connect multiple cells in series and in parallel during operation in order to achieve the required voltage and current. However, this fixed configuration results in low reliability, low fault tolerance, and nonoptimal energy conversion efficiency. This paper proposes a novel power electronics-enabled self-X, multicell battery design. The proposed multicell battery can automatically configure itself according to the dynamic load/storage demand and the condition of each cell. The proposed battery can self-heal from failure or abnormal operation of single or multiple cells, self-balance from cell state variations, and self-optimize to achieve optimal energy conversion efficiency. These features are achieved by a new cell switching circuit and a high-performance battery management system proposed in this paper. The proposed design is validated by simulation and experiment for a 6 × 3 cell polymer lithium-ion battery. The proposed design is universal and can be applied to any type and size of battery cells.**

***Index Terms*—Multicell battery, self-balance, self-healing, self-reconfiguration, switching circuit.**

## I. Introduction

RECHARGEABLE multicell batteries have been used in various electrical and electronic systems [1]–[5], e.g., renewable energy systems, (hybrid) electric vehicles, commercial electronics, etc. The latest battery cell technologies, such as LiFePO4 (lithium iron phosphate) and nLTO (nano lithium titanate oxide), have largely solved most critical concerns in terms of safety, cycle and calendar life, energy density, gravimetric density, specific density, charge/discharge capability, and fast charge capability. However, several design deficiencies in current multicell battery systems have impeded them from being used for large-scale energy storage. These deficiencies include: 1) adopting a fixed configuration for cell connections, resulting in low reliability and low fault tolerance during abnormal operating conditions, such as high temperature, overcharge, overdischarge, and overcurrent [6]; 2) lacking an effective method to utilize cell state variations, resulting in nonoptimal energy conversion efficiency; and 3) lacking a capability for flexible dynamic power management, resulting in nonoptimal system performance.

A commonly used method to solve the problem of faulty or abnormal cells in a fixed-configuration design is using safety circuits. Safety circuits protect cells from high temperature, overcharge, overdischarge, and overcurrent by monitoring the temperature, voltage, and current of each cell. However, lacking an effectively reconfigurable topology, the safety circuits will cut off the whole battery system when any single cell is operating under these abnormal conditions. Moreover, cell state variations are commonly present in multicell batteries [7]. In this case, the fixed-configuration design can only utilize a part of the total battery capacity, which reduces the operating time and lifespan of the battery system. To overcome this deficiency, cell balancing circuits are used. However, most existing balancing circuits use dissipative resistors, resulting in energy loss [8]. The latest products of cell balancing integrated circuits (ICs) [9] use electronic converters to transfer charge from cell to cell during operation. However, this solution increases the cost and volume of the battery system and it might only be available for batteries with multiple cells connected in series. Recently, several reconfigurable multicell battery topologies have been proposed for portable electronic devices [10]–[12]. However, these topologies are too complex and unrealistic for battery systems with large numbers of cells. In [13], the authors proposed a reconfigurable multicell battery design where multiple cells are only connected in series to achieve the required voltage level.

This paper extends the work of [13] by proposing a novel self-X multicell battery design, where self-X stands for self-reconfiguration, self-balance, self-healing, and self-optimization. In the proposed design, the cells in a battery can be dynamically configured in series and in parallel during operation to achieve the required voltage and current, respectively. A new cell switching circuit is proposed where each cell in the battery only uses one switch to fully control its charge, discharge, and cutoff, independently. A new gate drive circuit is designed for controlling ON/OFF of each switch in the cell switching circuit. A new battery management system (BMS) is proposed to perform the functions of sensing and condition monitoring, model-based state of charge (SOC) tracking, control, protection, etc., for the battery system. Consequently, the proposed battery system can dynamically configure itself during operation according to the load/storage demand and the condition of each cell in order to achieve self-healing from failures of single or multiple cells, self-balancing from cell state variations, and self-optimizing for optimal energy conversion efficiency. Compared to existing reconfigurable battery topologies [10]–[12], the number of switches in the proposed topology is significantly

Manuscript received September 16, 2011; revised December 4, 2011; accepted December 29, 2011. Date of current version June 20, 2012. This work was supported in part by the U.S. National Science Foundation under CAREER Award ECCS-0954938. Recommended for publication by Associate Editor H.-J. Chiu.

The authors are with the Department of Electrical Engineering, University of Nebraska–Lincoln, Lincoln, NE 68588-0511 USA (e-mail: taesickim@huskers.unl.edu; wqiao@engr.unl.edu; liyanqu@ieee.org).

Color versions of one or more of the figures in this paper are available online at http://ieeexplore.ieee.org.

Digital Object Identifier 10.1109/TPEL.2012.2183618

0885-8993/$31.00 © 2012 IEEE

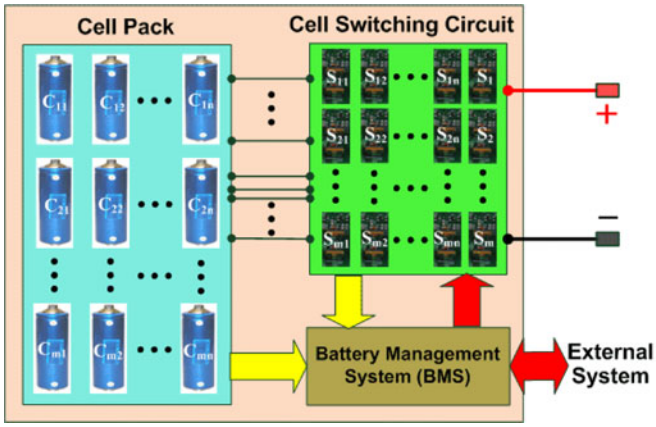


Fig. 1. Proposed self-X, multicell battery design.

reduced. This reduces the cost, complexity, and control effort of the battery system and facilitates the reconfiguration process.

## II. Proposed Self-X Multicell Battery Design

The proposed self-X multicell battery as shown in Fig. 1, consists of three parts: 1) a cell pack; 2) a cell switching circuit; and 3) a BMS. The external system can be a bidirectional dc/dc converter as an interface between the battery and the source and load to control the charge and discharge of the battery.

### A. Cell Pack

The nominal voltages and currents of most single battery cells are limited to several volts and tens of amperes, e.g., 3.7 V and 0.86 A for the polymer lithium-ion cells used in this paper, which are much lower than the voltages and currents required in many applications. In the proposed design, the cell pack consists of $m \times n$ cells, which are dynamically configured by the cell switching circuit during operation to meet the voltage and current requirements.

### B. Cell Switching Circuit

Fig. 2 shows the proposed cell switching circuit topology for an $m \times n$ cell battery pack, where $n$ cells are connected in parallel to form a cell bank to provide higher currents, and $m$ banks are connected in series to step up the voltage at the terminals of the battery. Only $m \times (n+1)$ controllable switches are needed to form the cell switching circuit. Each cell uses only one switch, e.g., the switch $S_{ij}$ for cell $C_{ij}$ ($i = 1, \ldots, m$ and $j = 1, \ldots, n$), which turn ON/OFF alternatively to connect/cut off the cell from the battery, respectively. Moreover, if switch $S_{ij}$ is ON, it will be able to conduct the current of cell $C_{ij}$ in two directions to charge/discharge the cell. Additional $m$ switches $S_1, \ldots, S_m$ are used where $S_i$ ($i = 1, \ldots, m$) is OFF if any of the $n$ switches ($S_{i1}, \ldots, S_{in}$) in bank $i$ is ON. However, if all of the $n$ switches in bank $i$ ($i = 1, \ldots, m$) are OFF, then $S_i$ should be turned ON. Turning $S_i$ ON ensures that the cells in lower rows ($S_{(i+1)1}, \ldots, S_{(i+1)n}, \ldots, S_{m1}, \ldots, S_{mn}$) can be connected to supply (discharge) or store (charge) energy through the terminals of the battery. The proposed cell switching circuit ensures that each cell in the battery pack can be controlled independently in three modes, i.e., OFF, ON/charge, and ON/discharge.

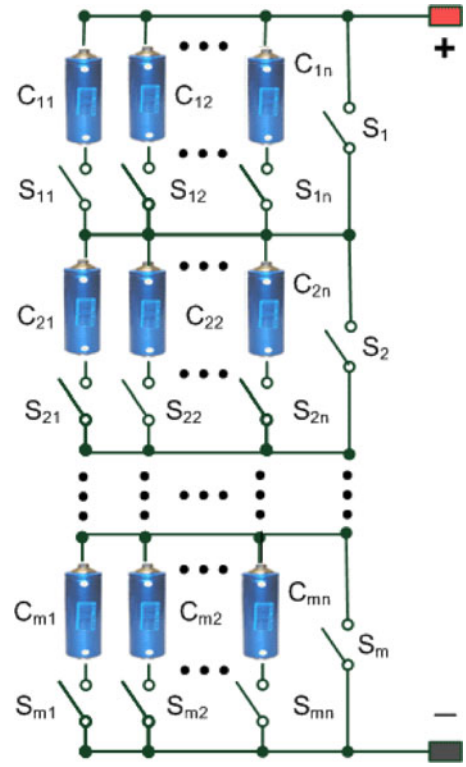


Fig. 2. Proposed cell switching circuit topology.

Low-cost, high-efficiency power MOSFETs are used for implementation of the switches in the cell switching circuit. The power MOSFETs can conduct bidirectional currents and have a negligible conduction loss because of their negligible ON resistance (see the Appendix). In this application, switching losses are not a concern because it typically takes a long time, e.g., 10 min or longer, for a switch to change its state.

Fig. 3 illustrates switch implementations for cell $C_{ij}$ ($i = 1, \ldots, m$ and $j = 1, \ldots, n$) using an n-channel power MOSFET $S_{ij}$ and for bank $i$ using a p-channel power MOSFET $S_i$ using two different gate drive circuits. It is crucial to connect the power MOSFETs in the correct direction due to the internal body diodes in the MOSFETs. As shown in Fig. 3, the anode of the body diode of the MOSFET $S_{ij}$ should be connected to the negative terminal of cell $C_{ij}$. This connection can block the unwanted discharges of cell $C_{ij}$. On the other hand, the cathode of body diode of MOSFET $S_i$ should be connected to the positive terminal of the cell, which prohibits the unwanted charges flowing through the body diode to banks $i+1, \ldots, n$ when cell $C_{ij}$ is connected, i.e., $S_{ij}$ is ON. The gate drive circuit in Fig. 3(a) is implemented by using four low-cost, small signal bipolar junction transistors (BJTs) $Q_{ij1}$, $Q_{ij2}$, $Q_{ij3}$, and $Q_{i1}$ and a junction gate field-effect transistor (JFET) $Q_{i2}$. The small signal BJTs can be replaced by small signal MOSFETs. The gate drive circuit only uses the voltage of cell $C_{ij}$ to turn ON the power MOSFET $S_{ij}$; no additional voltage source is required. When $Q_{ij1}$ turns ON, it drives $Q_{ij2}$ ON, which turns $S_{ij}$ ON by

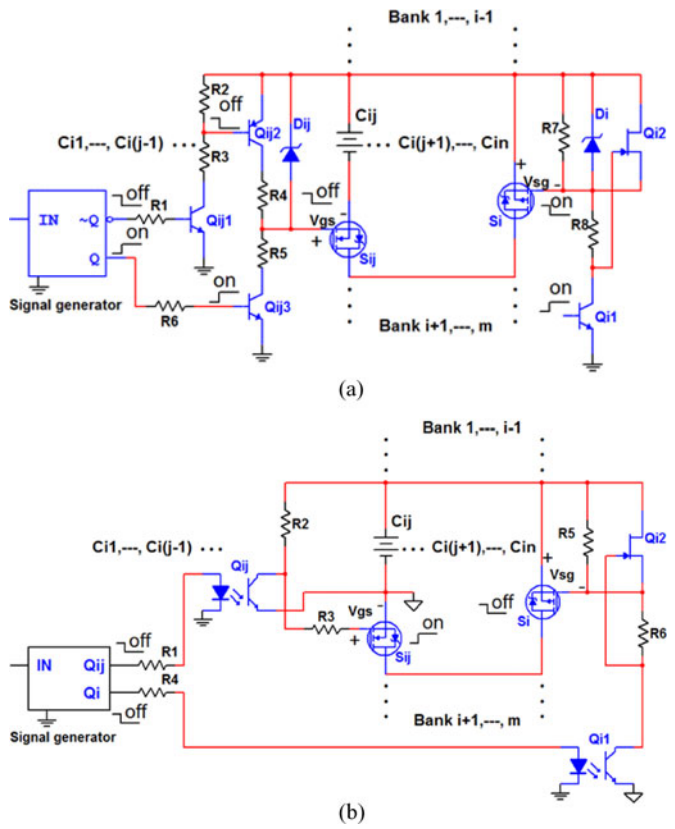


Fig. 3. Switch implementation for cell $C_{ij}$ using an n-channel power MOSFET and for bank *i* using a p-channel power MOSFET with a gate drive circuit using (a) small signal BJTs and (b) optocouplers.

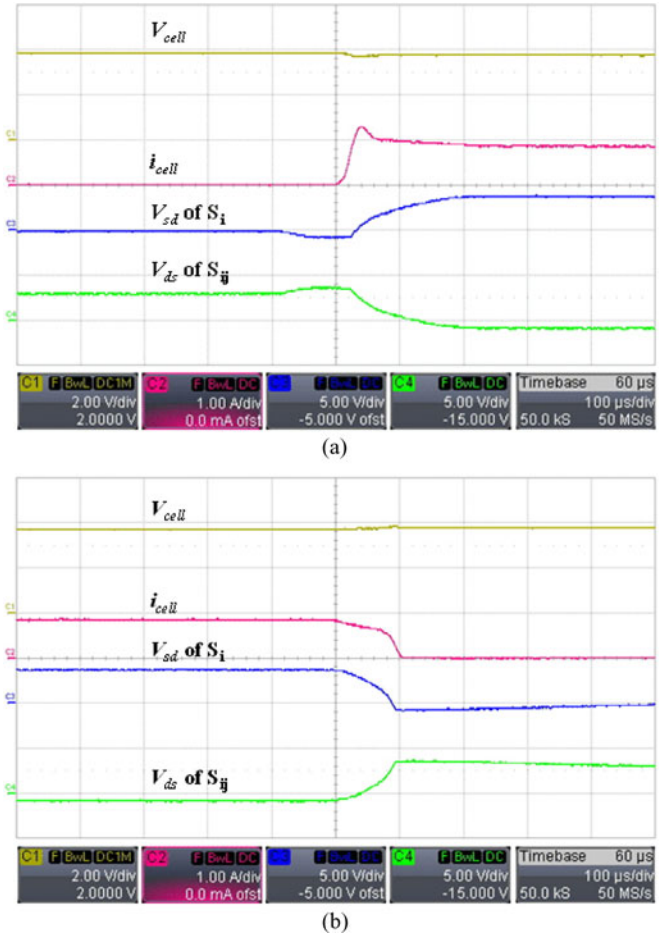


Fig. 4. Transient waveforms of the switching implementation for cell *k* in operating 1 C (0.86 A) load current. (a) $S_{ij}$ ON and $S_i$ OFF. (b) $S_{ij}$ OFF and $S_i$ ON.

using the voltage of cell $C_{ij}$. Turning $S_{ij}$ OFF is accomplished by turning $Q_{ij1}$ OFF while turning $Q_{ij3}$ ON, which discharges the parasitic capacitor between the gate and source terminals of $S_{ij}$. When $Q_{i1}$ turns ON, it provides a gate signal to turn ON the power MOSFET $S_i$. Turning $S_i$ OFF is accomplished by turning OFF $Q_{i1}$ while turning ON $Q_{i2}$. The value of *R*7 should be large enough to ensure that the energy consumption of the gate drive circuit is negligible, which however results in slow turn-OFF of $S_i$. To speed up turn-OFF of $S_i$, $Q_{i2}$ is implemented by using a JFET. In this switching implementation, an n-channel MOSFET with a low threshold $V_{gs}$ (e.g., 1.5–2 V) should be used for $S_{ij}$ because the voltage of cell $C_{ij}$ is in the range of 4.2–3 V. Two Zener diodes $D_{ij}$ and $D_i$ are used to limit the voltage between the source and the gate terminals of $S_{ij}$ and $S_i$, respectively.

Fig. 3(b) shows an alternative gate drive circuit, which uses two optocouplers to replace the four small signal BJTs in Fig. 3(a). The negative terminal of the battery cell is used as the virtual ground for the gate drive circuit. The gate signal generated by the signal generator is applied to the gate terminals of the power MOSFETs through the corresponding optocouplers to drive the power MOSFETs. Since the grounds of the gate drive circuit and signal generator are separated from that of the cell switching circuit, the switching implementation in Fig. 3(b) can be used for multicell batteries at any voltage levels. In Fig. 3(b), when $Q_{ij}$ turns ON, it drives $S_{ij}$ OFF. Turning ON $S_{ij}$ is accomplished by turning OFF $Q_{ij}$. When $Q_{i1}$ turns ON, it provides a gate signal to turn ON $S_i$. Turning OFF $S_i$ is accomplished by turning OFF $Q_{i1}$ while turning ON $Q_{i2}$.

The small signal components in the gate drive circuits are appropriately chosen to ensure that the energy consumption of the gate drive circuits is negligible compared to the energy flow in the cell, and there is no short circuit between $S_{ij}$ and $S_i$ during transient switching periods. Fig. 4 illustrates the transient waveforms of cell $C_{ij}$ and its switching circuit in Fig. 3(a) when the cell is operated with a 1 C (0.86 A) load current. During the transient switching periods, there is no short circuit between $S_{ij}$ and $S_i$ and the transition from one operating mode to another is smooth, as demonstrated in the waveforms of the cell voltage $V_{\text{cell}}$ and current $i_{\text{cell}}$ and the voltages between the source and drain terminals of $S_{ij}$ and $S_i$. This ensures safe operation of cell $C_{ij}$.

Although the proposed design is illustrated for cell-level switching implementation in Fig. 3, it can also be used for module-level switching implementation, where each module consists of multiple cells connected in parallel and/or series. In this case, the individual cells in the cell pack (see Figs. 1 and 2) become modules. Consequently, the cell pack and cell switching circuit become a cell module pack and a module switching circuit, respectively.

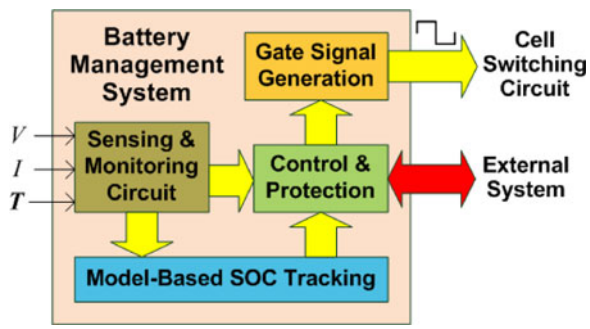


Fig. 5. Schematic diagram of the BMS.

### C. Battery Management System (BMS)

The BMS, as shown in Fig. 5, performs the functions of sensing and condition monitoring, model-based SOC tracking, control and protection, gate signal generation, and interfacing with the external system for the battery. The sensing and monitoring circuit monitors the voltage, current, and temperature for each cell. The control and protection module uses the sensed information to protect the battery cells from overcharge/overdischarge, overcurrent, and overtemperature. If any of these abnormal conditions occurs in a cell or the cell fails, it will be cut off immediately. The remaining cells are still used to supply/store power and, therefore, the whole battery system self-heals from abnormal conditions or failures of cells. The SOC of each cell is tracked by a model-based method presented in Section III.

The control and protection module determines the best cell configuration based on the dynamic load/storage demand and the condition of each cell to achieve the optimal energy conversion efficiency of the battery system and self-balancing from cell state variations. The functional block flowchart of the control and protection module is illustrated in Fig. 6. Many applications require the battery systems to supply power to load at a constant voltage level and absorb power from a constant voltage source. Therefore, a bidirectional dc/dc converter (i.e., the external system in Fig. 1) is commonly used as the interface between the battery and the load/source to control charge and discharge of the battery. In this case, the battery system can be operated with variable voltages by using $k$ ($k = 1, \ldots, m$) out of $m$ banks simultaneously. This means that some banks can be disconnected from the battery system for self-healing, self-optimization, and self-balancing during operation. Given the power demand from the load or the power supplied by the source $P_d$ as well as the required voltage by the load or source, the control module determines the optimal values of the voltage $V_d$ and current $I_d$ of the battery, where $P_d = V_d\, I_d$, using the tradeoff of two conditions: 1) since the efficiency of the dc/dc converter depends on its power and duty cycle (voltage gain), the terminal voltage of the battery should be set at a value such that the dc/dc converter is operated with a voltage gain leading to the maximum efficiency for the converter; and 2) the current should be as small as possible to utilize the rate capacity effect to maximize the energy conversion efficiency of the battery. In practice, a lookup table can be created offline to store the optimal voltage and current of the battery at each load/source power and voltage condition

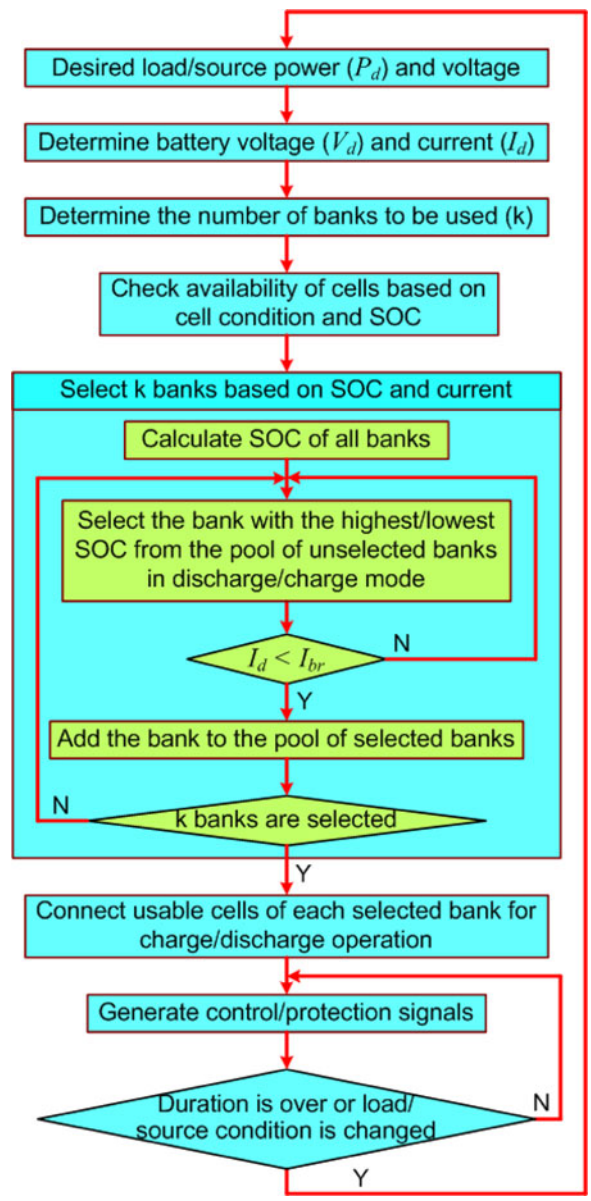


Fig. 6. Functional block flowchart of one control cycle of the control and protection module.

for the entire system operating range. The lookup table is then used online to determine the optimal battery voltage and current according to the real-time system operating condition.

According to the desired voltage, the number of series banks to be used, $k$ ($0 < k \leq m$), is determined by dividing the desired voltage by the average voltage of the banks. The control and protection module then checks the condition and SOC of each cell. If a cell fails, is in an abnormal condition, or its SOC is lower than a low limit (in discharge mode) or higher than a high limit (in charge mode), the cell will be disconnected from the battery system. The remaining healthy cells will be used to supply or store power. The SOCs of the usable banks are then sorted in descending order, where the SOC of a bank $\mathrm{SOC}_b$ is

calculated by

$$\mathrm{SOC}_b = \frac{1}{n}\sum_{i=1}^{n}\mathrm{SOC}_i \tag{1}$$

where $\mathrm{SOC}_i$ is the SOC of the $i$th cell in the bank. If a cell is disconnected, then its SOC is zero. If the control module determines that $k$ out of $m$ banks should be used, the $k$ banks with the highest SOCs will be used in the discharge mode or the $k$ banks with the lowest SOCs will be used in the charge mode, provided that the selected banks can supply the desired current, i.e., the following condition must be satisfied for each selected bank:

$$I_d \leq I_{br} = n_a I_{cr} \tag{2}$$

where $I_d$ is the desired current of the battery, $n_a$ is the number of usable cells in the bank, and $I_{br}$ and $I_{cr}$ are the rated current of the bank and each cell, respectively. By using these criteria, the control module determines which banks in the battery system are connected to supply power to the load or absorb power from the source. All of the usable parallel cells in each selected bank are used simultaneously to charge/discharge with continuous currents. This whole process is called a control cycle, as illustrated in Fig. 6. The control cycle restarts with a certain predefined time interval $T_s$ or when the load/source condition is changed. The proposed control scheme always tends to balance the SOCs of the battery cells in both charge and discharge modes.

In the proposed BMS, since all of the healthy cells in a selected bank will always be connected in parallel and used simultaneously to supply/store power, the cell voltages will be equal. However, in the worst case, if the cells in a bank have unequal voltages, cell balancing will be performed for the bank by discharging the cells sequentially from the one with the highest SOC if in a discharge operation or charging the cells sequentially from the one with the lowest SOC if in a charge operation, until the voltages of all cells become equal. According to the output of the control and protection module, the gate signal generation module generates appropriate control signals to control the power MOSFETs through their gate drive circuits.

The duration $T_s$ of the control cycle will affect the performance of the proposed battery system. Generally, the operating time of the battery increases with the decrease of $T_s$. However, using a very small $T_s$ will result in frequent switching of the power MOSFETs and, therefore, increase in the switching loss of the cell switching circuit. In practice, the value of $T_s$ should be selected such that the SOCs of all $m$ banks will be balanced before any single bank is fully charged in a charge operation or fully discharged in a discharge operation. In this study, the value of $T_s$ is determined by

$$T_s = \frac{3600}{I} \times \delta \tag{3}$$

where $T_s$ is in seconds, $I$ is the normalized battery current in C, and $\delta$ is a percentage. If the SOCs of all banks are higher than a low threshold (e.g., 10%) in a discharge operation or lower than a high threshold (e.g., 90%) in a charge operation, a large $\delta$ (e.g., $\delta = 5\%$) will be used. On the other hand, if the SOC of a bank becomes lower than the low threshold in a discharge operation or higher than the high threshold in a charge operation, a small $\delta$ (e.g., $\delta = 1\%$ or 0.5%) will be used.

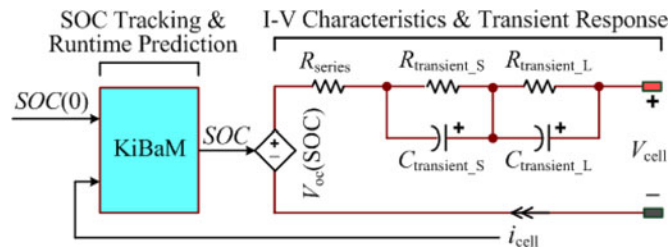


Fig. 7. Hybrid battery model.

An important issue in the design of the BMS for the proposed multicell battery is the grounding of the power MOSFET gate drive circuits, cell sensing and monitoring circuits (including cell voltage, current, and temperature sensing circuits), and control and protection circuits. If the cell switching circuit is implemented by using the circuit in Fig. 3(a), the power MOSFET gate drive circuits, cell sensing and monitoring circuits, and control and protection circuits will use the same ground. However, if the cell switching circuit is implemented by using the circuit in Fig. 3(b), the power MOSFET gate drive circuits and cell sensing and monitoring circuits will use the same virtual grounds, which are the negative terminals of the corresponding battery cells, but the ground of the control and protection circuits will be separated from that of the gate drive circuits and cell sensing and monitoring circuits. In this case, optically coupled signal isolators will be used between the sensing and monitoring circuits and control and protection circuits for transferring the sensed information.

## III. Modeling of Battery Cells

An accurate battery cell model is needed in order to validate the proposed multicell battery design by simulation studies. Moreover, monitoring, control, and protection of battery systems also need an accurate battery model for SOC tracking, etc. In this paper, a hybrid battery model proposed in [14] is used, as shown in Fig. 7. The hybrid model enhances the electrical circuit model in [15] by replacing its left-hand side *RC* circuit with a module based on the kinetic battery model [14] to capture the nonlinear capacity variations by taking into account nonlinear capacity effects, such as the recovery effect and rate capacity effect, of the battery cell. Therefore, the hybrid battery model is capable of capturing comprehensive battery performance more accurately than the electrical circuit model by coupling the dynamic electrical circuit characteristics with nonlinear capacity effects of the battery cell. In addition, the proposed battery model needs less computational cost than the enhanced circuit-based model in [16], making more feasible for real-time applications. The module on the left of the hybrid model performs the functions of SOC tracking and run-time prediction for the battery cell. A voltage-controlled voltage source $V_{oc}$(SOC) is used to bridge the SOC to the cell open-circuit voltage. The *RC* circuit on the right simulates the *I–V* characteristics and transient

response of the battery cell, where the series resistance $R_{\text{series}}$ is used to characterize the charge/discharge energy losses of the cell; other resistances and capacitances are used to characterize the short-term (transient_S) and long-term (transient_L) transient responses of the cell, and $V_{\text{cell}}$ represents the terminal voltage of the cell. The hybrid battery model is expressed in the following [14]:

$$\text{SOC}(t) = \frac{C_{\text{available}}(t)}{C_{\max}} = \text{SOC}_{\text{initial}} - \frac{1}{C_{\max}}\left[\int i_{\text{cell}}(t)dt + C_{\text{unavailable}}(t)\right] \quad (4)$$

$$C_{\text{unavailable}}(t) = \begin{cases} C_{\text{unavailable}}(t_0)e^{-k'\cdot(t-t_0)} + (1-c)\dfrac{I}{c}\cdot\dfrac{1-e^{-k'\cdot(t-t_0)}}{k'}, & t_0 < t < t_d \\ C_{\text{unavailable}}(t_d)e^{-k'\cdot(t-t_d)}, & t_d < t < t_r \end{cases} \quad (5)$$

$$V_{oc}[\text{SOC}(t)] = a_0 e^{-a_1 \text{SOC}(t)} + a_2 + a_3\text{SOC}(t) - a_4\text{SOC}^2(t) + a_5\text{SOC}^3(t) \quad (6)$$

$$\begin{cases} R_{\text{serines}}(\text{SOC}) = b_0 e^{-b_1\text{SOC}} + b_2 + b_3\text{SOC} - b_4\text{SOC}^2 + b_5\text{SOC}^3 \\ R_{\text{transient_S}}(\text{SOC}) = c_0 \cdot e^{-c_1\cdot\text{SOC}} + c_2 \\ C_{\text{transient_S}}(\text{SOC}) = d_0 \cdot e^{-d_1\cdot\text{SOC}} + d_2 \\ R_{\text{transient_L}}(\text{SOC}) = e_0 \cdot e^{-e_1\cdot\text{SOC}} + e_2 \\ C_{\text{transient_L}}(\text{SOC}) = f_0 \cdot e^{-f_1\cdot\text{SOC}} + f_2 \end{cases} \quad (7)$$

where $\text{SOC}_{\text{initial}}$ is the initial SOC the battery cell, $i_{\text{cell}}$ is the cell current, $t_0$, $t_d$, and $t_r$ are the beginning time, discharge ending time, and (rest) ending time, respectively, of a period during which $i_{\text{cell}}$ is constant, and $C_{\max}$, $C_{\text{available}}$, and $C_{\text{unavailable}}$ are the maximum, available, and unavailable capacities of the cell, respectively.

The hybrid battery model is implemented in MATLAB Simulink. Fig. 8 compares the terminal voltage responses obtained from simulations using the electrical circuit model and the hybrid model with experimental results for a 3.7 V, 860 mAh polymer lithium-ion cell (see the Appendix) under a constant discharge current of 1.86 C (1.6 A). The parameters of the hybrid battery model for the polymer lithium-ion cell are listed in Table I [14]. As shown in Fig. 8, the terminal voltage response obtained from the hybrid battery model matches the experimental result better than that obtained from the electrical circuit model, particularly when the battery cell is close to fully discharged.

## IV. Simulation Results

A 6 × 3 cell battery system is built using the proposed design and is simulated in MATLAB/Simulink. Each cell is a 3.7 V, 860 mAh polymer lithium-ion cell, which is represented by the hybrid battery model in Section III. It is assumed that all the cells in the same bank have the same SOC and the initial SOCs of banks 2–5 are all at 100%, Fig. 9(a) and (b) compares the total energy in watthour that can be supplied by the fixed configuration and the proposed self-X batteries for different SOCs of banks 1 and 6. These results clearly show that the proposed design significantly improves the energy usage of the multicell battery. For example, when the SOC of bank 1 or 6 or both becomes zero, the whole battery with the fixed configuration has to be cut off and cannot supply any energy to the load although the usable capacity of the battery is still significant. On the other hand, the proposed self-X battery can supply energy from other banks, even when the SOC of bank 1 or bank 6 or both becomes zero. For example, in the worst case when the SOCs of banks 1 and 6 are both zero, the self-X battery can still supply a total of 36.88 Wh energy from banks 2–5, which is 66.7% of the maximum energy capacity of the battery. This shows the self-healing feature of the proposed design.

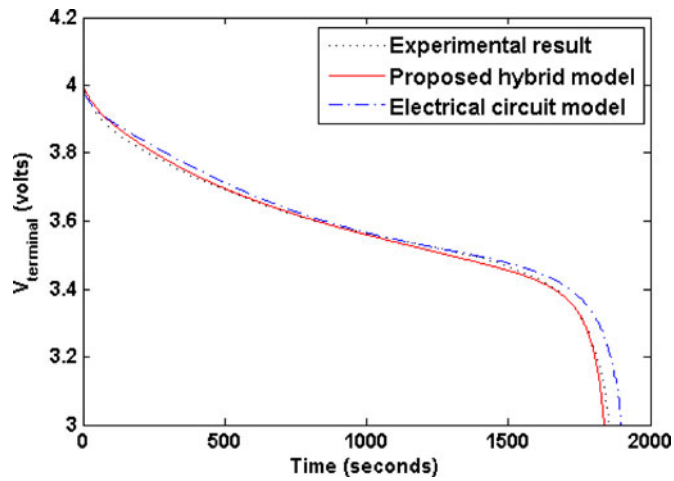


Fig. 8. Comparison of simulation and experimental results for a single cell under 1.86 C (1.6 A) constant discharge.

## V. Experiment Results

The self-X multicell battery used in the simulation studies is constructed in hardware to further validate the proposed design. Fig. 10 shows the experimental system setup. High efficiency power MOSFETs are used to form the cell switching circuit on a printed circuit board (PCB). The gate drive circuit in Fig. 3(a) is used to drive the power MOSFETs in the cell switching circuit. The sensing, control, and protection functions are also implemented on the PCB. The cells are charged by a variable dc source and discharged through a programmable dc electronic load. Table II compares the simulation and experimental results of the proposed self-X battery design and simulation results of the fixed-configuration design for three scenarios. Scenarios 1 and 2 are used to validate the self-healing feature of the proposed design. Self-optimizing for optimal energy conversion efficiency is validated by scenario 3. In all scenarios, the discharge current of the battery is 2.58 A (i.e., 1 C). For all scenarios, the experimental results agree with the simulation results.

TABLE I
BATTERY MODEL PARAMETERS FOR A POLYMER LITHIUM-ION CELL

| | | | | | | | | | | | |
|---|---|---|---|---|---|---|---|---|---|---|---|
| $a_0$ | -0.852 | $a_1$ | 63.867 | $a_2$ | 3.6297 | $a_3$ | 0.559 | $a_4$ | 0.51 | $a_5$ | 0.508 |
| $b_0$ | 0.1463 | $b_1$ | 30.27 | $b_2$ | 0.1037 | $b_3$ | 0.0584 | $b_4$ | 0.1747 | $b_5$ | 0.1288 |
| $c_0$ | 0.1063 | $c_1$ | 62.49 | $c_2$ | 0.0437 | $d_0$ | -200 | $d_1$ | -138 | $d_2$ | 300 |
| $e_0$ | 0.0712 | $e_1$ | 61.4 | $e_2$ | 0.0288 | $f_0$ | -3083 | $f_1$ | 180 | $f_2$ | 5088 |
| $c$ | 0.9248 | $k'$ | 0.0008 | | | | | | | | |

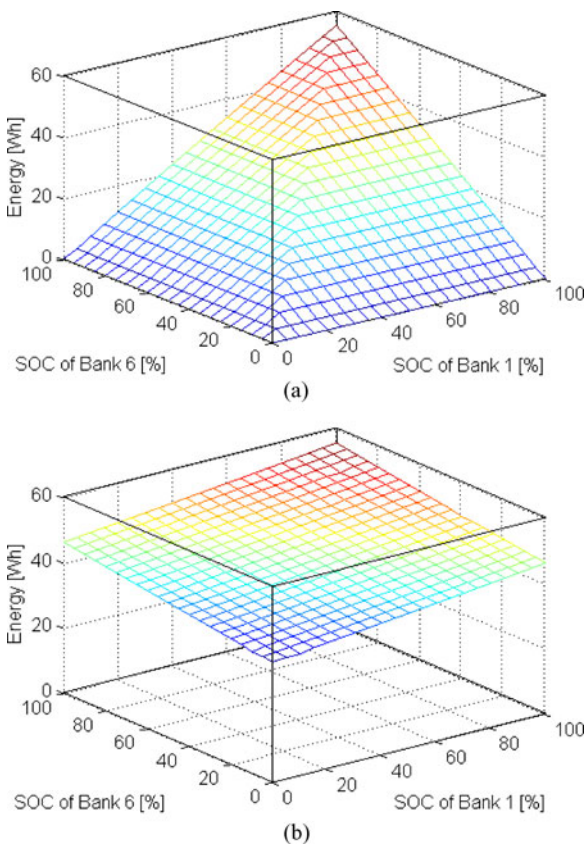


Fig. 9. Total energy in watthour that can be supplied by (a) the fixed-configuration and (b) the proposed self-X, 6 × 3 cell batteries.

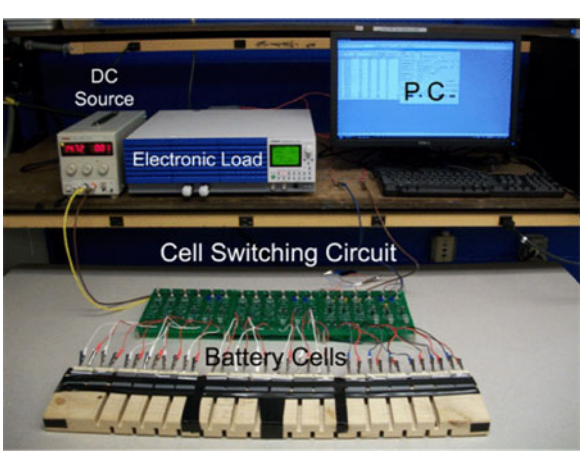


Fig. 10. Experimental system setup.

In scenarios 1 and 2, the 18 cells are discharged simultaneously using the constant current (CC) mode. Since the initial SOCs of the cell banks are different, the cell banks are fully discharged sequentially. In the fixed-configuration design, once a cell bank is fully discharged, the whole battery has to be cut off and cannot supply any energy to the load, although the usable capacity of the battery is still significant. In the proposed design, once a cell bank is fully discharged, it will be disconnected from the battery pack by the cell switching circuit but the remaining cell banks still provide energy to the load. Compared to the fixed-configuration design, the proposed self-X design can supply 16 and 24.73 Wh more energy, which are 28.9% and 44.7% of the maximum capacity of the battery, in scenarios 1 and 2, respectively.

Fig. 11 compares the terminal voltage response of the self-X battery obtained from simulation and experiment for scenario 2, which shows that not only the steady state but also the dynamic responses of the battery obtained from simulations agree with those from experiments. Therefore, the comparison in Fig. 9 validates the superiority of the proposed self-X battery design over the traditional fixed-configuration design.

In scenario 3, the six banks of the self-X battery are divided into two groups and each group has three banks. The two groups of cell banks are discharged alternately, i.e., pulse discharge (PC), with a time interval of 300 s until all the cells are fully discharged. Compared to the fixed-configuration battery that uses CC discharge, more energy (∼1 Wh) is supplied by the self-X battery when using PC. The PC method utilizes the recovery effect to improve the energy conversion efficiency of the battery, which, however, cannot be achieved by the traditional fixed-configuration battery design.

## VI. SIMULATION VALIDATION OF CELL BALANCING OPERATIONS

The results in Figs. 8 and 11 and Table II show that simulations are valid to evaluate the proposed design. Therefore, in this section, simulation studies are carried out to further validate the cell balancing operations of the proposed battery design.

### A. Cell Balancing in Discharge Mode

In this test, the self-X battery model built in MATLAB/Simulink is operated in the discharge mode. The control module determines that three banks should be used with a discharge current of 2.58 A. Assume that all of the 18 cells are healthy, and the initial SOCs of the six banks are 100% (bank 1), 95%

TABLE II
COMPARISON OF SIMULATION AND EXPERIMENTAL RESULTS

| Scenario | Discharge method | Initial conditions of cell banks expressed by SOC [%] | | | | | | Energy [Wh] | | |
|---|---|---|---|---|---|---|---|---|---|---|
| | | Bank 1 | Bank 2 | Bank 3 | Bank 4 | Bank 5 | Bank 6 | Self-X design | | Fixed-configuration design (Simulation) |
| | | | | | | | | Simulation | Experiment | |
| 1 | C.C. = 2.58 A | 80 | 100 | 100 | 100 | 100 | 60 | 49.5 | 49.0 | 33.5 |
| 2 | C.C. = 2.58A | 75 | 100 | 100 | 100 | 100 | 40 | 47.1 | 46.87 | 22.37 |
| 3 | C.C. = 2.58 A; P.C.=2.58 A (300s on, 300s off) | 100 | 100 | 100 | 100 | 100 | 100 | 56.32 (P.C.) | 56.0 (P.C.) | 55.3 (C.C.) |

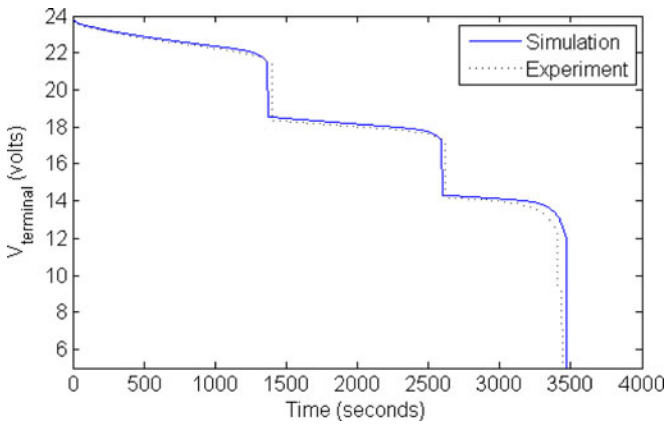


Fig. 11. Comparison of the terminal voltage responses of the self-X battery obtained from simulation and experiment for scenario 2.

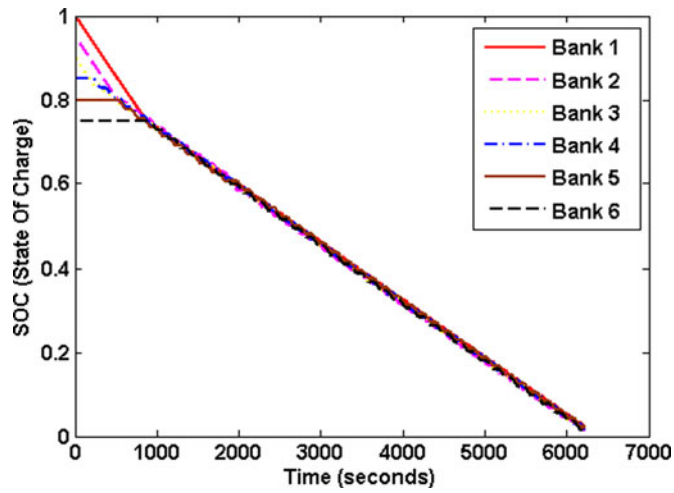


Fig. 12. SOCs of the cell banks in discharge mode. Three banks are used simultaneously.

(bank 2), 90% (bank 3), 85% (bank 4), 80% (bank 5), and 75% (bank 6). Three out of the six banks are discharged simultaneously. The interval of one control cycle is chosen to be $T_s = 75$ s. The battery is continuously discharged until no bank has usable capacity. Fig. 12 shows the SOCs of the six banks during the whole discharge operation. It clearly shows that the BMS balances the cell banks during the battery discharge. The SOCs of the six banks are balanced at about 1000 s. This cannot be achieved by using the fixed-configuration design. Fig. 13 compares the terminal voltage responses of the self-X battery when using different durations for the control cycle. The operating time of the battery increases with the decrease of the duration of the control cycle. The reason is that the banks become more balanced when using a shorter control cycle.

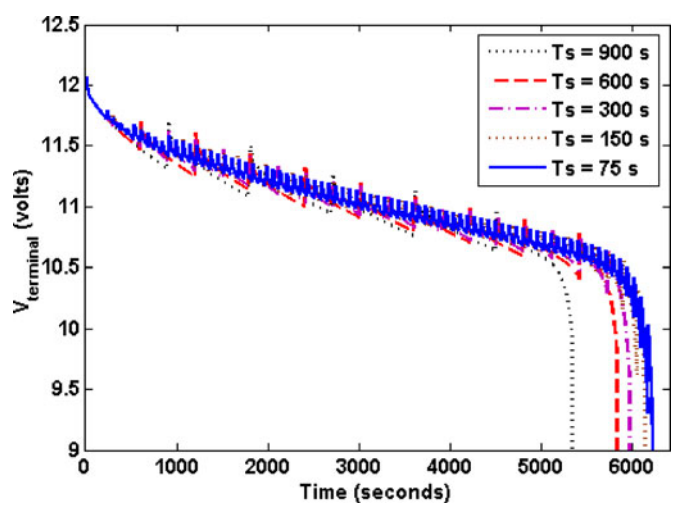


Fig. 13. Comparison of the terminal voltage responses of the self-X battery when using different durations for the control cycle.

### B. Cell Balancing in Charge Mode

A similar test is performed for the self-X battery operated in the charge mode. The initial SOCs of the six banks are 20% (bank 1), 25% (bank 2), 30% (bank 3), 35% (bank 4), 40% (bank 5), and 45% (bank 6). Three out of the six banks are charged simultaneously. The battery is continuously charged with a current of 2.58 A until all of the six banks are fully charged. Fig. 14 shows the SOCs of the six banks during the whole process. The results clearly show that the BMS balances the cell banks during the battery charge. Again, the SOCs of the six banks are balanced at about 1000 s.

### C. Cell Balancing in Discharge Mode While One Cell Fails During Discharge

In this test, the self-X battery is operated at the same operating condition of the discharge mode as in Section VI-B. However, one cell in bank 4 fails at 500 s. This reduces the SOC of bank 4 by 33.3%. Fig. 15 shows the SOCs of the six banks during the whole discharge operation. Compared to Fig. 12, it takes the battery system more time (1000 s) to balance the SOCs of

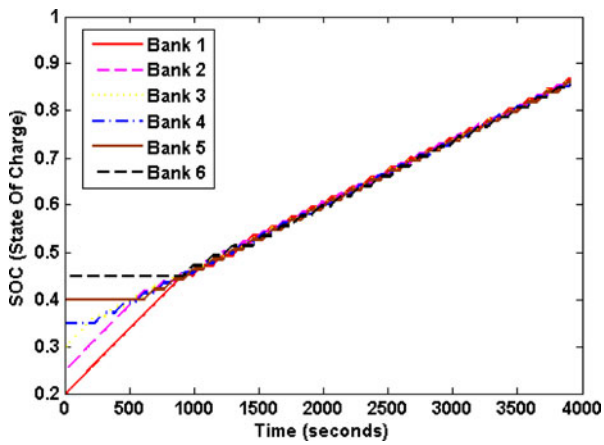


Fig. 14. SOCs of the cell banks in charge mode. Three banks are used simultaneously.

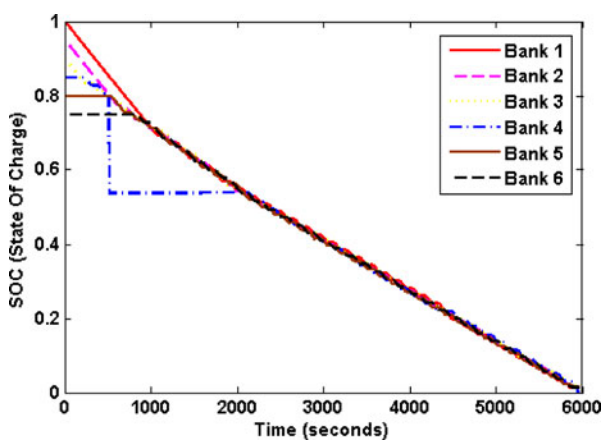


Fig. 15. SOCs of the cell banks in discharge mode. One cell in bank 4 fails at 500 s.

the six banks due to the significant loss of the SOC in bank 4. These results clearly demonstrate both the self-balancing and self-healing characteristics of the battery.

## VII. Efficiency Analysis for Cell Switching Circuit

Compared to the traditional fixed-configuration design, the proposed self-X design causes additional power losses to the battery system due to the cell switching circuit. An efficiency analysis is performed for the cell switching circuit to further validate the proposed design. The total power loss of the cell switching circuit includes the losses in the MOSFET switching circuit and the gate drive circuits. The power losses in the MOSFET switching circuit include the conduction and switching losses of the power MOSFETs. The switching losses can be neglected because it typically takes a long time for a MOSFET to change its state as mentioned in Section II-B. The conduction losses depend on the current flowing through the battery cell and power MOSFET. The power losses of the gate drive circuit [see Fig. 3(a)] depend on the small signal components in the circuit and the current of the battery cell. The small signal components have been appropriately chosen to ensure that the energy consumption of the gate drive circuit is negligible compared to the energy flow in the cell. The parameters of the small signal components are listed in the Appendix.

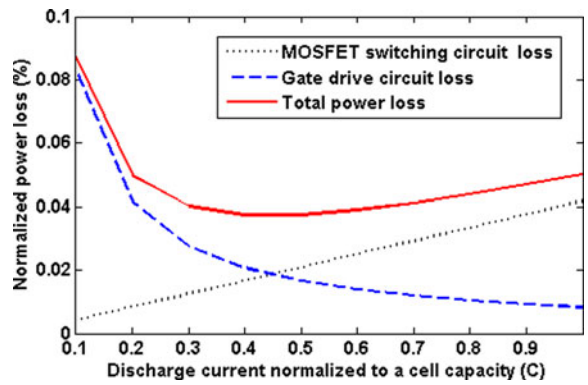


Fig. 16. Normalized power losses of the cell switching circuit as functions of normalized discharge current for a single 3.7 V, 0.86 Ah polymer lithium-ion cell.

Fig. 16 shows the experimental results of the normalized power losses of the MOSFET switching circuit and the gate drive circuit as well as the normalized total power loss of the cell switching circuit as functions of the discharge current for a single 3.7 V, 0.86 Ah polymer lithium-ion cell of the $6 \times 3$ cell self-X battery. The current is normalized to the capacity of the cell. The power losses are normalized the output of the cell. The results show that the normalized power loss of the MOSFET switching circuit increases linearly with the cell current. On the other hand, the normalized power loss in the gate drive circuit decreases with the discharge current. At low currents, the power loss of the gate drive circuit is dominant and the normalized total power loss reduces with the increase of the cell current. When the current is higher than 0.5 C, the power loss in the MOSFET switching circuit becomes dominant and the normalized total power loss is almost constant.

Large scale battery systems, such as those used for vehicle and power grid energy storage, usually employ large capacity cells. Fig. 17 compares the efficiency as a function of the normalized discharge current for 0.86, 5, 10, and 20 Ah polymer lithium-ion cells. The efficiency of the cell switching circuit decreases with the increase of the cell capacity. However, even for 20 Ah cells, the efficiency of the cell switching circuit is still higher than 99% over the entire operating current range of the cell. The efficiency can be further improved by several approaches: 1) using power MOSFETs with a lower on resistance; 2) using multiple power MOSFETs connected in parallel to form a switch of the cell switching circuit in Fig. 2 to share the corresponding cell current; and 3) applying the switching circuit to battery modules instead of cells, where each module will consist of multiple cells connected in series.

The efficiency of the cell switching circuit in the battery charge mode is the same as the results in Figs. 16 and 17. Therefore, the round-trip efficiency of the cell switching circuit for the battery systems with large capacity cells, which is common in power and energy system applications, can be made higher than 99.9% easily. These results indicate that the proposed self-X battery design does not reduce the efficiency of the battery systems for power and energy system applications.

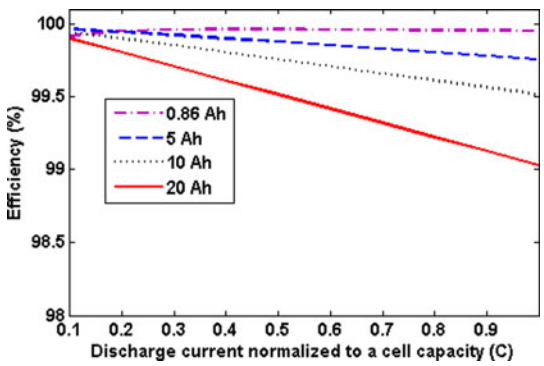


Fig. 17. Comparison of the efficiency of the cell switching circuit as a function of normalized discharge current for 0.86-, 5-, 10-, and 20-Ah polymer lithium-ion cells.

In addition to the losses in the cell switching circuit, other losses of the battery system include the losses in the sensing and monitoring circuit as well as the control and protection circuit. These losses are almost constant and do not depend on the capacity of the battery cells or the operating conditions of the battery system. For battery systems using large capacity cells, these losses are negligible compared to the power of the battery systems. Moreover, these losses are also present in traditional fixed-configuration battery systems. Therefore, they are not discussed in this paper.

## VIII. Conclusion

This paper has presented a novel power electronics-enabled self-X multicell battery design. The proposed multicell battery can automatically configure itself according to the dynamic load/storage demand and the condition of each cell, self-heal from failures and abnormal operating conditions of single or multiple cells, self-balance from cell state variations, and self-optimize to achieve the optimal energy conversion efficiency. These features are achieved by a highly efficient cell switching circuit and a high-performance BMS. Simulation and experimental results have shown a remarkably improved energy usage of multicell batteries using the proposed design. The proposed design is universal and can be applied to any type and size of battery cells. By using the proposed design, additional monitoring, control, protection, and optimization functions can be readily added to each cell and the overall battery system, leading to a smart battery.

## Appendix

The parameters of the components used in the simulation and experimental studies are listed as follows.

1) Battery cells: pl-383562 2C (polymer lithium-ion); nominal voltage: 3.7 V; nominal capacity: 860 mAh; discharge cutoff voltage $V_{\mathrm{cutoff}}$: 3 V; charge cutoff voltage $V_{\mathrm{over}}$: 4.2 V; and maximum discharge current: 2 C (1.72 A).
2) Power MOSFETs: n-channel MOSFET: AON6400L ($\mathrm{S}_{ij}$), $V_{\mathrm{DSS}} = 30$ V, $I_{\mathrm{DMAX}} = 85$ A, $R_{\mathrm{DS(on)}} = 1.8$ m$\Omega$, $V_{\mathrm{th}} = 1.7$ V; p-channel MOSFET: IPD90P03P4L-04 ($\mathrm{S}_i$) $V_{\mathrm{DSS}} = -30$ V, $I_{\mathrm{DMAX}} = -90$ A, $R_{\mathrm{DS(on)}} = 4.1$ m$\Omega$, $V_{\mathrm{th}} = -1.5$ V.
3) Small signal transistors: MMBT 2222 ($Q_{ij1}$, $Q_{ij3}$ and $Q_{i1}$), and MMBT 2907 ($Q_{ij2}$).
4) Small signal JFET: MMBFJ201 ($Q_{i2}$).
5) Sensing and monitoring circuit: voltage sensor: LT1991; current sensor: ACS706ELC-05 C, $R_{\mathrm{DS(on)}} = 1.5$ m$\Omega$.
6) Resistors in the power MOSFET gate drive circuit [see Fig. 3(a)]: $R1 = 20$ k$\Omega$, $R2 = 10$ M$\Omega$, $R3 = 1$ M$\Omega$, $R4 = 49.9$ k$\Omega$, $R5 = 300$ k$\Omega$, $R6 = 20$ k$\Omega$, $R7 = 560$ k$\Omega$, and $R8 = 300$ k$\Omega$.

## References

[1] H. Qian, J. Zhang, J.-S. Lai, and W. Yu, "A high-efficiency grid-tie battery energy storage system," *IEEE Trans. Power Electron.*, vol. 26, no. 3, pp. 886–896, Mar. 2011.
[2] H. Zhou, T. Bhattacharya, D. Tran, T. S. T. Siew, and A. M. Khambadkone, "Composite energy storage system involving battery and ultracapacitor with dynamic energy management in microgrid applications," *IEEE Trans. Power Electron.*, vol. 26, no. 3, pp. 923–930, Mar. 2011.
[3] K.-Y. Lo, Y.-M. Chen, and Y-R. Chang, "MPPT battery charger for stand-alone wind power system," *IEEE Trans. Power Electron.*, vol. 26, no. 6, pp. 1631–1638, Jun. 2011.
[4] M. Bragard, N. Soltau, S. Thomas, and R. W. De Doncker, "The balance of renewable sources and user demands in grids: Power electronics for modular battery energy storage systems," *IEEE Trans. Power Electron.*, vol. 25, no. 12, pp. 3049–3056, Dec. 2010.
[5] L. Maharjan, T. Yamagishi, H. Akagi, and J. Asakura, "Fault-tolerant operation of a battery-energy-storage system based on a multilevel cascade PWM converter with star configuration," *IEEE Trans. Power Electron.*, vol. 25, no. 9, pp. 2386–2396, Sep. 2010.
[6] D. Linden and T. B. Reddy, *Handbook of Batteries*, 3rd ed. New York: McGraw-Hill, 2001.
[7] O. Erdinc, B. Vural, and M. Uzunoglu, "A dynamic lithium-ion battery model considering the effects of temperature and capacity fading," in *Proc. 2009 Int. Conf. Clean Elect. Power*, Jun. 9–11, 2009, pp. 383–386.
[8] J. Cao, N. Schofiled, and A. Emadi, "Battery balancing methods: A comprehensive review," in *Proc. IEEE Vehicle Power Propulsion Conf.*, Harbin, China, Sep. 3–5, 2008, pp. 1–6.
[9] BQ 102 Datasheet, "Power LAN dual-cell Li-ion battery monitor with power pump cell balancing," Texas Instrument, Dallas, Dec. 2008.
[10] S. Ci, J. Zhang, H. Sharif, and M. Alahmad, "A novel design of adaptive reconfigurable multicell battery for power-aware embedded networked sensing system," in *Proc. IEEE Global Telecommun. Conf.*, Nov. 26–30, 2007, pp. 1043–1047.
[11] S. K. Mandal, P. S. Bhojwani, S. P. Mohanty, and R. N. Mahapata, "IntellBatt: Towards smarter battery design," in *Proc. 45th Annu. ACM/IEEE Design Autom. Conf.*, Jun. 8–13, 2008, pp. 872–877.
[12] H. Visairo and P. Kumar, "A reconfigurable battery pack for improving power conversion efficiency in portable devices," in *Proc. 7th Int. Caribbean Conf. Devices, Circuits Syst.*, Apr. 28–30, 2008, pp. 1–6.
[13] T. Kim, W. Qiao, and L. Qu, "Series-connected reconfigurable multicell battery," in *Proc. Appl. Power Electron. Conf. Expo.*, Fort Worth, TX, Mar. 6–10, 2011, pp. 1382–1387.
[14] T. Kim and W. Qiao, "A hybrid battery model capable of capturing dynamic circuit characteristics and nonlinear capacity effects," *IEEE Trans. Energy Convers.*, vol. 26, no. 4, pp. 1172–1180, Dec. 2011.
[15] M. Chen and G. A. Rincon-Mora, "Accurate electrical battery model capable of predicting runtime and I–V performance," *IEEE Trans. Energy Convers.*, vol. 21, no. 2, pp. 504–511, Jun. 2006.
[16] J. Zhang, S. Ci, Sharif, and M. Alahmad, "An enhanced circuit-based model for single-cell battery," in *Proc. 25th Appl. Power Electron. Conf. Exhib.*, Feb. 2010, pp. 672–675.

**Taesic Kim** (S'10) received the B.S. degree in electronics engineering from Changwon National University, Changwon, Korea, in 2008. He is currently working toward the Ph.D. degree in electrical engineering at the University of Nebraska–Lincoln, Lincoln.

In 2009, he was with the New and Renewable Energy Research Group, Korea Electrotechnology Research Institute, Changwon. His research interests include renewable energy systems, power electronics, battery modeling and power management, and energy storage system design and optimization.

**Wei Qiao** (S'05–M'08) received the B.Eng. and M.Eng. degrees in electrical engineering from Zhejiang University, Hangzhou, China, in 1997 and 2002, respectively, the M.S. degree in high performance computation for engineered systems from Singapore-MIT Alliance, Singapore, in 2003, and the Ph.D. degree in electrical engineering from the Georgia Institute of Technology, Atlanta, in 2008.

From 1997 to 1999, he was an Electrical Engineer with China Petroleum & Chemical Corporation (Sinopec Corporation). He is currently the Harold and Esther Edgerton Assistant Professor with the Department of Electrical Engineering, University of Nebraska–Lincoln (UNL), Lincoln. He is the author or coauthor of three book chapters and more than 90 papers in refereed journals and international conference proceedings. His research interests include renewable energy systems, smart grids, microgrids, power system control and optimization, condition monitoring and fault diagnosis, energy storage systems, power electronics, electric machines and drives, and computational intelligence for electric power and energy systems.

Dr. Qiao is an Associate Editor of the IEEE TRANSACTIONS ON INDUSTRY APPLICATIONS, the Chair of the Sustainable Energy Sources Technical Thrust of the IEEE Power Electronics Society, and the Chair of the Task Force on Intelligent Control for Wind Plants of the IEEE Power & Energy Society. He is the Publications Chair of the 2013 IEEE Energy Conversion Congress and Exposition and the Technical Program Co-Chair of the 2012 IEEE Symposium on Power Electronics and Machines in Wind Applications (PEMWA 2012). He was the Technical Program Co-Chair and Finance Co-Chair of PEMWA 2009. He was the recipient of the 2010 National Science Foundation CAREER Award, the 2010 IEEE Industry Applications Society Andrew W. Smith Outstanding Young Member Award, the 2011 UNL Harold and Esther Edgerton Junior Faculty Award, and the 2011 UNL College of Engineering Edgerton Innovation Award.

**Liyan Qu** (S'05–M'08) received the B.Eng. (with the highest distinction) and M.Eng. degrees in electrical engineering from Zhejiang University, Hangzhou, China, in 1999 and 2002, respectively, and the Ph.D. degree in electrical engineering from the University of Illinois at Urbana–Champaign, Urbana, in 2007.

From 2007 to 2009, she was an Application Engineer with Ansoft Corporation. She is currently a Senior Lecturer with the Department of Electrical Engineering, University of Nebraska–Lincoln, Lincoln. Her research interests include energy efficiency, renewable energy, numerical analysis and computer-aided design of electric machinery and power electronics devices, dynamics and control of electric machinery, permanent magnet machines, and magnetic materials.